70336-00001.C

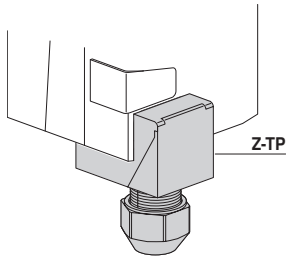

1

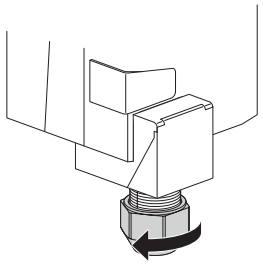

2

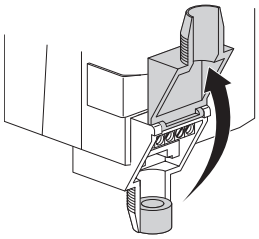

3

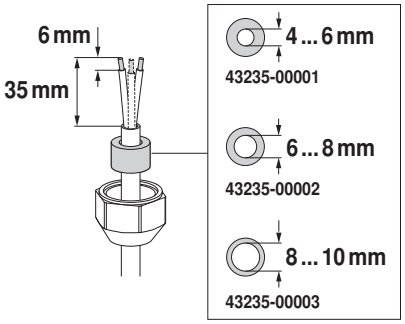

4

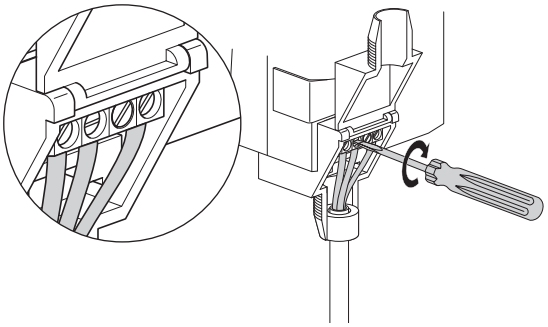

LM..TA..-TP / NM..TA..-TP / LM..TB..-TP

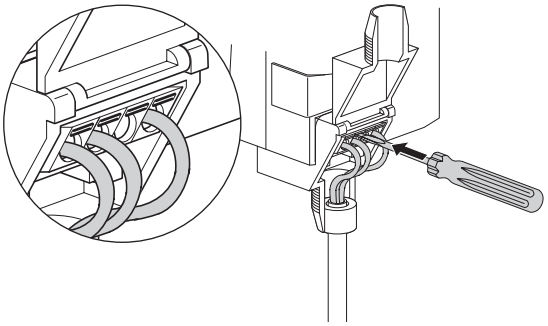

5

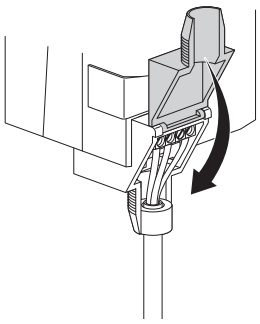

6

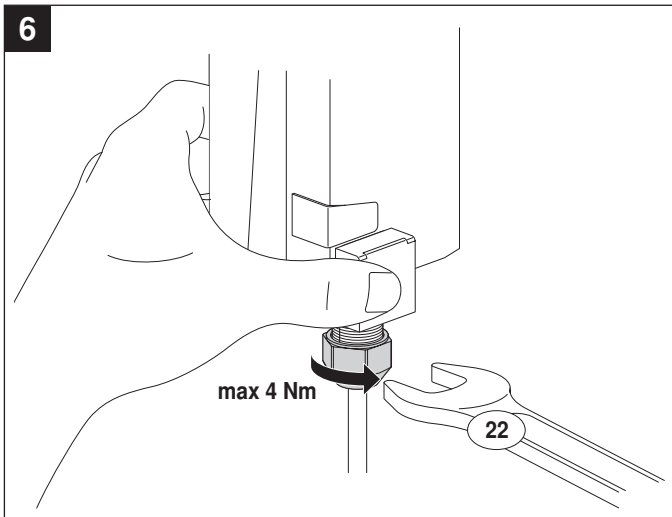

www.belimo.eu/safety