72060-00001.A

i

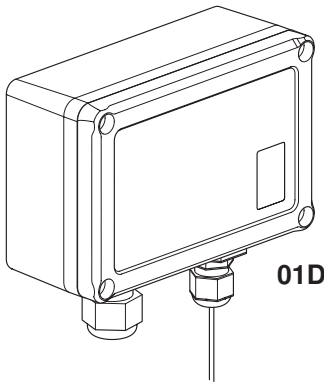

01DTS-1..

AGRO/FLEXA
M16
8217.40
M20
8220.40

AGRO/FLEXA
❶ M16
5020.055.216
❷ M20
5020.055.218

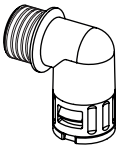

AGRO/FLEXA
M20
5020.051.220

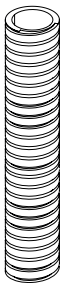

AGRO/FLEXA
PA6
0233.202.012

1

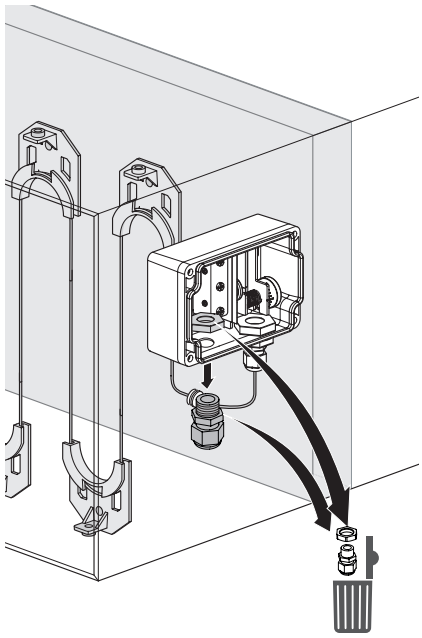

2

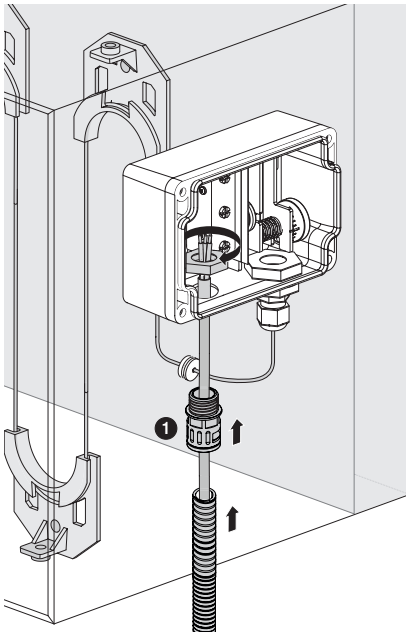

3

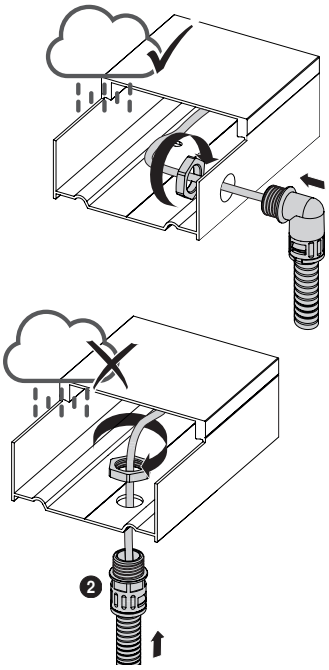

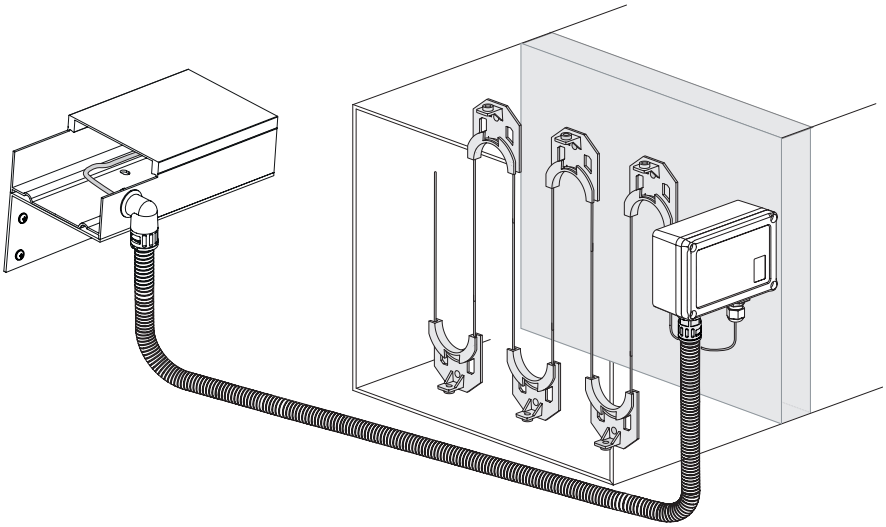

www.belimo.com/safety